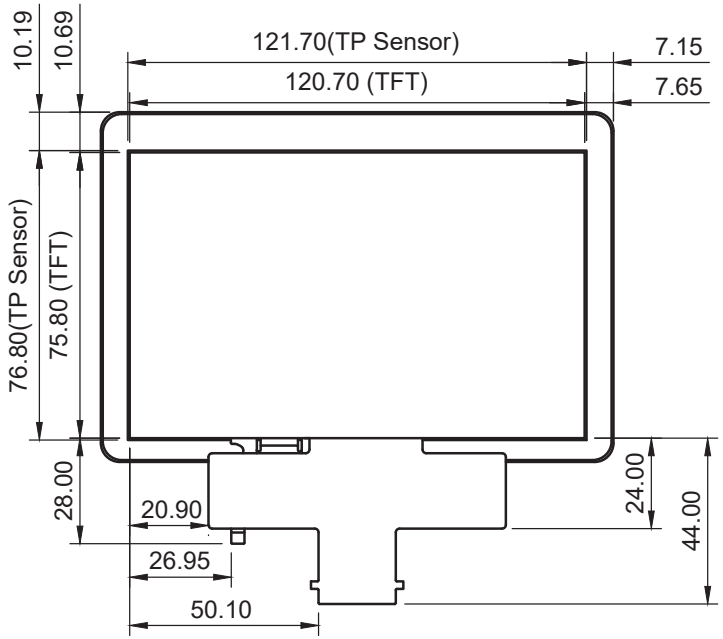

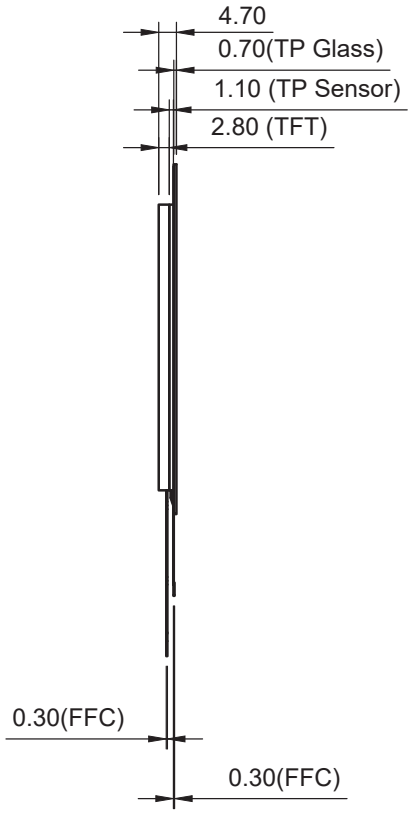

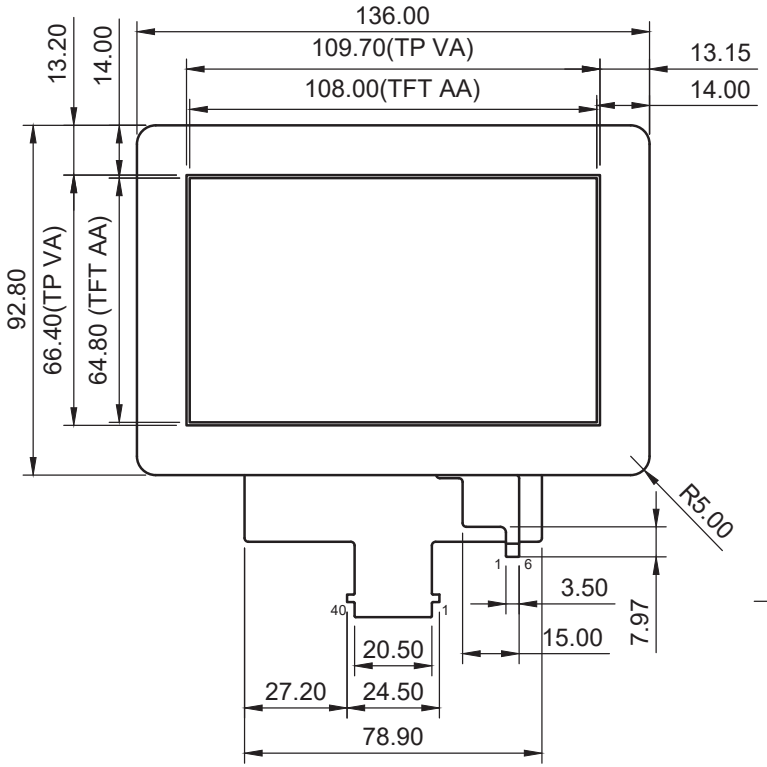

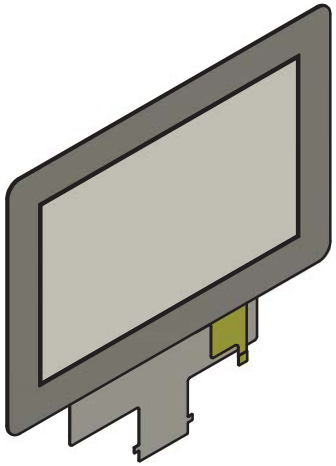

Dept.	Technical reference	Created by	Approved by
D&D		Dan Divino 2/15/2018	Troy Clark 21/2/2018
		Document type: Drawing	Document status: Released
		Title: MOP-TFT800480-50G-TPC 5.0" Parallel TFTwith Bezel-less Capacitive Touch	DWG No.
			Rev. 1.1 / Date of issue 2/15/2018 / Sheet 1/1